INSULINPUMP

User Manual

(Model: PH300)

www.phray.com

Hello!

Thank you for giving your trust in us.

Thank you for purchasing a PH300 insulin pump. As a reliable partner, PH300 insulin pump with many clear-operating and ingenious functions makes you happy every time.

PH300 insulin pump provides a series of thought-out functions for you, as histogram basal rate setting, percentage temporal basal rate delivery, easy and simply operating for normal bolus, square wave bolus, auto-rewinding of screw, and auto-calculating of filled insulin. It is so convenient and easy-using that it can meet various customers.

PREFACE

This user guide provides information on basic configuration about PH300 insulin pump. Therefore, it is necessary to read this manual carefully before you operate it.

This guide is suitable for the pump users and the professional doctors. This guide was written according to the status of the pump at that time it was published. With the improvement of the product, the guide will be modified when it will be published again, and the modified items will not be noticed. In no case, you can present any requirement to Phray Company according to this guide.

All rights are reserved. It is illegal to pirate or copy without Phray Company's permission.

Contents

1. **Important Information**……..……1~2
2. **Features and Structure**…….…....3~4
   Features……...3
   Structure……..4
3. **Applicable Scope**……...5
4. **Glossary** ……6~8
5. **Accidence for Using**……9~16
   Know Pump……9
   Buttons……....9
   Screen……10
   How to Use……....12
6. **Menus**……...17
7. **Basal**……..……..……...18~24
   Basal Rate……..…18
   Refer. Basal……....20
   Temp Basal……....21
   Basal Plans……..…23
   Basal Review……..…24
8. **Bolus**……...25~29
   Normal Bolus……25
   Square Wave……..…27
   Meals Bolus……..…28
   Bolus Review……....29
9. **Fill and Exhaust**……30~34

Contents

Rewind Screw……30
Exhaust……31
Daily Review……..…32
Exhausting Review……...32
Alarms Review……..33
10. **Suspend**……..…35
11. **Parameters Setting**……...……...36~38
Date/Time……...……...36
Alarms……...……36
Resume Factory……...……..37
12.**Doctor’s Parameters**……39~40
13. **Other Information**……...……41
14.**Troubleshooting**……...…42
15. **Technical Parameters**……...43~44

Important Information

1. It is necessary for using the pump to be guided by the doctor or theprofessional.
2. You must read the user guide carefully before using the pump. And you must operate the pump as the user guide required.
3. It is necessary to adjust the time and the date after installing the battery into the pump.
4. Never use the pump on the conditions as bathing, swimming, strenuous exercise, and high-temperature, high electromagnetic field.
5. When using the pump, you should pay attention to various alarms, the remains of the insulin and the working status of the pump.
6. For the user guide and the pump, 1u means 0.01ml.
7. If there is any problem happened when the pump operating, stop it immediately and contact the pump agency or the sales representative.
8. If you feel unwell when the pump delivers insulin into your body, stop it immediately and contact your healthcare professional.
9. Choose the famous AAA battery as the power for the pump, because that the bad battery with short life will even destroy the pump.
10. The battery must be taken out if the pump will not be

used for long time.

11. Keep the pump clean. And never use the strong corrosive cleanser to clean the pump.

Features and Structure

❖ **Features**

PH300 insulin pump is an intelligent assistant device driving the injector to deliver insulin into body, and it is composed with the controlling system, the displaying system and the driving system. The device can not accomplish deliver insulin alone, it is necessary for making a whole delivering system to install the tank and the pipe.

On account of that the double CPUs of the pump control each other, the security of the device achieves (even exceeds) the corresponding standards for insulin pump entirely. The pump shell is made one-times by entire injection molding directly with high strength and high anti-impact polymers, so the waterproof capability and the anti-shock capability of the pump are guaranteed.

Features and Structure

❖ **Structure**

1. Main body 2. Battery Cap 3. Battery Key
4. Reservoir Cap 5. Coat 6. AAA Battery
7. Pipeline 8. Reservoir

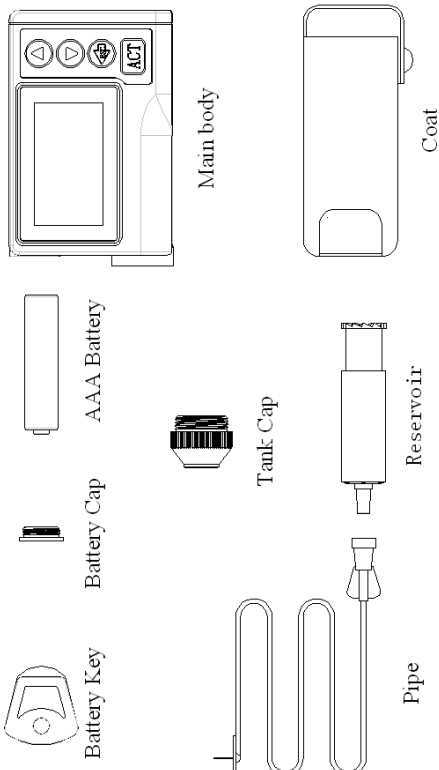

Applicable Scope

The device is suitable for exact insulin delivery for diabetes treatment.

Glossary

- **Basal Rate**

  Basal rate means the basal insulin delivery, which provides continuously over 24 hours a day insulin delivery as programmed amount of insulin for each hour, to maintain target glucose values between meals and overnight. The basal rate is measured in units per hour (u/h).

- **Refer. Basal**

  Refer. Basal is a fast operation for setting basal rate. After total daily basal and time adjust set, the standard insulin allocation scheme would be set automatically, which is for 24 hours.

- **Temp Basal**

  Temp basal is the shortening of the temporary basal rate delivery. In the process of the basal rate delivery, on the reason of surrounding or body, the amount of insulin for some hours should be increased or decreased in percentage, so the temp basal mode should be applied.

- **Basal Plans**

  Basal plan is also named profile, which records a new

insulin allocation scheme for basal. User could be easy to choose one for fitting a new living style, rather than changing the current basal scheme.

❖ **Normal Bolus**

This mode is manual, which infuses insulin dose one-times. (This amount of insulin is additional on the total of basal rate over 24 hours a day.)

❖ **Square Wave**

It is the shortening of square wave bolus. For the duration of 30~240 minutes, the programmed amount of insulin is delivered uniformly in pulsed form. (This amount of insulin is additional on the total of basal rate over 24 hours a day.)

❖ **Meals Bolus**

User could preset the insulin infusion capacity for breakfast, lunch and super under this function, in order to infuse the bolus directly when the function is turned on.

❖ **Daily Total**

This is the total of infused insulin over a day,

including by the basal rate deliveries and the bolusdeliveries.（shown as the following picture.）

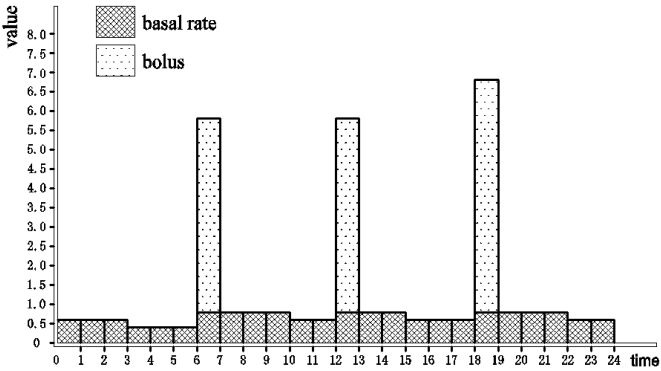

Accidence for Using

❖ **Know Pump**

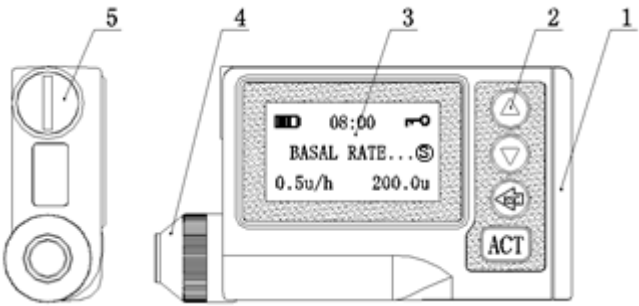

1. Main Body 2. Buttons 3. Display Screen
4. Reservoir Cap 5. Battery Cap

❖ **Buttons**

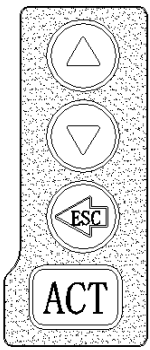

▲▼ **UP / DOWN**scrolls the items shown in the screen, or changes the value of a highlight item. Press and hold **UP** or **DOWN** for longer than 2 seconds for continuous scrolling or changing.

ESC With this button, return the prior screen, or exit from the current operation saving change.

ACT With this button, affirm and execute the selected item, or enter the main menu.

Accidence for Using

❖ **Screen**

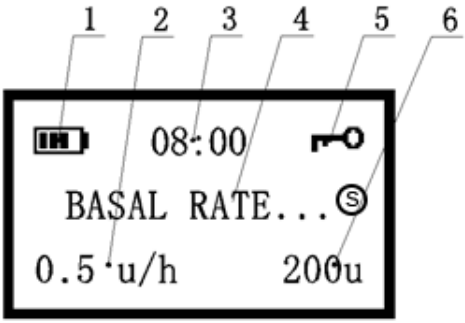

1. **Battery Icon** lets you know the remnant power of battery at any moment.

   CAUTION:

   - Replace with a new battery, when the battery icon is flashing which indicates the battery will be exhausted.

2. **Delivering Speed or Remnant Time Display** When '**0.5 u/h**' is displayed, it indicates delivering insulin with the speed of 0.5 units per hour. When the square wave mode is applied, "**60 min**"displayed indicates the remnant duration is 60 minutes for the square wave mode.

3. **Clock** indicates the current time.
4. **Working Status Display** makes you know at which status the pump is working currently. In generally, the information displayed are **"BASAL RATE. . ."**, **"TEMP BASAL. . ."**, **" NORMAL BOLUS. . . "**, **" SQUARE WAVE. . . "**, **" REWINDING. . . "**, **"EXHAUSTING. . ."**, **"BLOCKED! ! !"**, **"SUSPENDED! ! !"**, and so on.
5. **Buttons Locked Icon** indicates the buttons are locked. And you can lock or unlock the buttons by pressing ▲ and ▼ in sequence in 3 seconds. When the buttons are unlocked, the icon is empty.
6. **Remnant Insulin Display** indicates the remaining amount of insulin in the reservoir.

CAUTION:

- Fill with insulin in time, when the display is flashing which indicates the reservoir will be empty.

Accidence for Using

❖ **How to Use**

1. **Install Battery**

   Insert the front end of battery key into the slot on battery cap, turn it anticlockwise, and remove the battery cap. Put a new AAA battery in the battery compartment, and place the battery cap and tighten it in clockwise direction. The pump sounds with **'DIDI'**, and the screen displays "Welcome" normally, this indicates the pump starts working correctly.

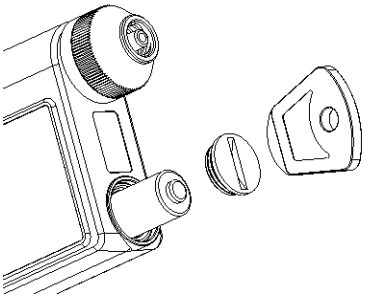

CAUTION:

- When putting the battery in the battery compartment, make sure the negative (-) end going in firstly.
- With the battery key to open or close the

battery cap is necessary, other tools may destroy the battery cap.

2. **Set Time**

   When **Home screen** is displayed, press **ACT** to go to **MAIN MENU** screen. Press ▼ to select **Settings,**and then press **ACT** to go to **SETTINGS MENU** screen with **Date/Time**selected default. In this time, press **ACT** to go to **DATE/TIME** SET screen. When this screen is displayed, press ▲▼ to set number for each item, press **ACT** to confirm and move to next item. Then press **ESC** to save settings andexit from this screen.

3. **Set Delivery Parameters**

   When **Home screen** is displayed, press **ACT** to go to **MAIN MENU** screen. Press ▼ to select **Basal,** and then press **ACT** to go to **BASAL MENU** screen with **Basal Rate**is selected default. In this time, press **ACT** to go to BASAL RATE SET screen. When this screen is displayed, press ▲▼to set amount of insulin for every hour, and press **ACT** to switch hours, and press **ESC** to exit

from this screen. (Refer for Basal Rate>Settings to set in detail.)

4. **Rewind Screw**

When **MAIN MENU** screen is displayed, press ▼ to select **Reservoir**, and then press **ACT** to go to **RESERVOIR** screen with **Rewind**selected default. In this time, press **ACT** to start rewinding screw, the screen displays "**REWINDING…**". The process of rewinding screw needs several minutes generally, so during this period, other preparation for filling insulin can be done.

CAUTION:

- The process of rewinding screw never stopsmanually.During of rewinding, the buttons are useless.

5. **Fill Reservoir with Insulin**

Fill the reservoir with insulin as the normal injector suctions liquid.

CAUTION:

- Onlythe reservoir whose size matches with this device can be applied.

6. **Load Reservoir and Pipeline**

Turn anticlockwise to remove the reservoir cap, and then insert the filled reservoir into the reservoir compartment, put back the reservoir cap and tighten it in clockwise direction, finally connect the pipeline and the reservoir.

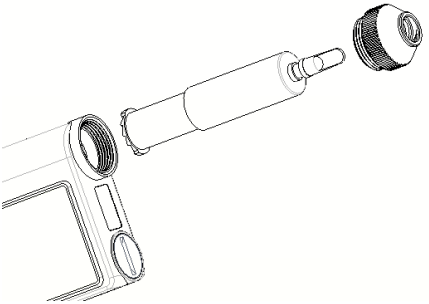

CAUTION:

- Affirm the rewinding screw is completed before loadthe reservoir.
- The reservoir is directional. Only the two flanges of thruster of reservoir match with the two grooves of reservoir compartment, the reservoir can be installed into correctly.

7. **Exhaust**

Back to**RESERVOIR** screen firstly, press ▼ toselect **Exhaust**, and then press **ACT** to make the pump start "**EXHAUSTING…**". In the process of exhausting, pressing **ESC** or**ACT** will stop exhausting. And exhausting will be stopped automatically in the condition that the exhausted amount arrives at 40u without pressing.

CAUTION:

- Be sure that the pipeline is disconnected from user's body, before starting to exhaust and until the exhausting is completed.

8. **Connect Pipeline with Body**

Refer to general insertion guideline of injection, insert the needle of the pipeline into user's body at appropriate site and fix it.

Menus

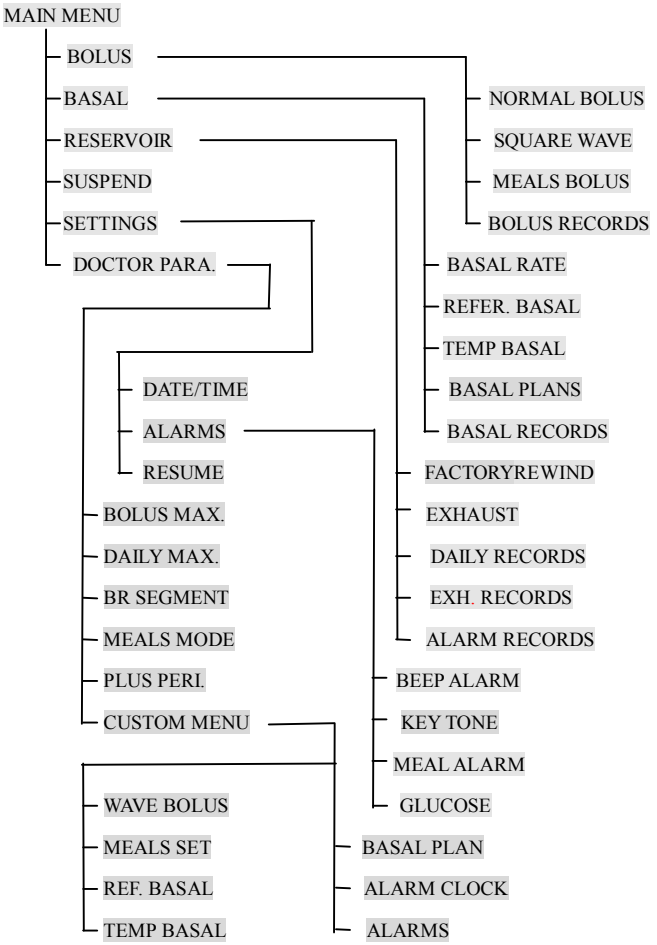
MAIN MENU
BOLUS
BASAL
RESERVOIR
SUSPEND
SETTINGS
DOCTOR PARA.
NORMAL BOLUS
SQUARE WAVE
MEALS BOLUS
BOLUS RECORDS
BASAL RATE
REFER. BASAL
TEMP BASAL
BASAL PLANS
BASAL RECORDS
DATE/TIME
ALARMS
RESUME
FACTORYREWIND
EXHAUST
DAILY RECORDS
EXH. RECORDS
ALARM RECORDS
BOLUS MAX.
DAILY MAX.
BR SEGMENT
MEALS MODE
PLUS PERI.
CUSTOM MENU
BEEP ALARM
KEY TONE
MEAL ALARM
GLUCOSE
WAVE BOLUS
MEALS SET
REF. BASAL
TEMP BASAL
BASAL PLAN
ALARM CLOCK
ALARMS

Basal

❖ **Basal Rate**

Site: **MAIN MENU**>**BASAL > BASAL RATE**

24 Segments:

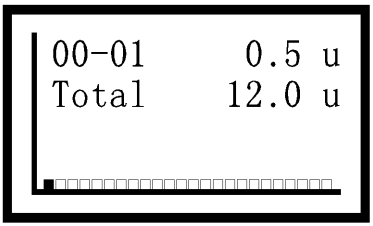

48 Segments:

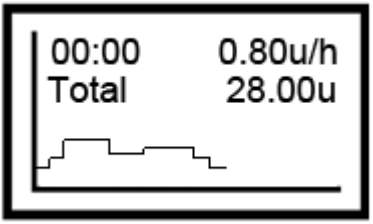

1. This is a basal rate setting screen. 24 histograms represent 24 delivery segments for one day, and the height of each histogram represents the corresponding hour delivery insulin value for basal rate delivery. The default value of each hour for 24 hours is 0.5u from factory.
2. '**00—01**'means the selected segment is from 0

o'clock to 1 o'clock during which the basal delivery insulin amount will be programmed. '**0.5 u**'means the delivery rate is 0.5u for the segment of 00-01. '**12.0 u**'means the total amount of basal delivery insulin for whole day 24 hours is 12.0u. Press **ACT** to select one of 24 hours. Press ▲ or ▼ to edit the corresponding basal delivery rate for the selected segment.

3. Choosing 48 segments, "00:00" means a half an hour treated as a segment, "0.8u/h" means the delivery speed is 0.8u per hour in this segment.

CAUTION:

- The maximum (MAX) of each segment is 5u/h. The accuracy for 24 rates is 0.1u/h, and that for 48 rates is 0.05u/h.
- When a new segment is selected, first-press ▲ or ▼ will result in the basal rate for this segment equals the one for the previous segment. Press and hold ▲ or ▼ to change the corresponding basal rate value continually and quickly.

Basal

❖ **Refer. Basal**

Site: **MAIN MENU > BASAL > REFER. BASAL**

When REFER. BASAL screen is displayed, press ▲ or ▼ to modify the value of highlight item, press ACT to change the highlight item. When the item activated, press ACT to activate the Refer. Basal. And then the result is displayed in **BASAL** screen and available to be modified more again.

CAUTION:

- The value of Refer. Basal is reference, the actual value is necessary to consult doctors in details.

Basal

❖ **Temp Basal**

Site: **MAIN MENU**>**BASAL > TEMP BASAL**

1. **Start Temp Basal**

```
 --TEMP BASAL--
►Speed:     120 %
 Duration: 03  h
 Start TEMP
```

When **TEMP BASAL** screen is displayed, press ▲ or ▼ to select an item denoted by ►. Press **ACT** to activate the selected item, meanwhile the item is highlighted, and press ▲ or ▼ to change the value. When ► denotes **START TEMP**, press **ACT** to start temp basal rate delivery.

Rangeof **DURATION**: 0－24 hours,
Range of **SPEED**: 0－200%.

2. Stop Temp Basal

```
 --TEMP BASAL--
►Speed:     120 %
 Duration: 03  h
 Cancel TEMP
```

When the temp basal rate delivery is active, you can stop it as the following steps. Firstly go to **TEMP BASAL** screen, and the third item is **STOP TEMP**now, press ▲ or ▼ to select it. when it is denoted by ►,press **ACT** to stop the temp basal rate delivery.

CAUTION:

- The percentage speed of temp basal is the ratio of the actual delivery value to the set basal rate delivery value.
- The time from starting temp basal to the first 0th minute is calculated as one hour.

Basal

❖ Basal Plans

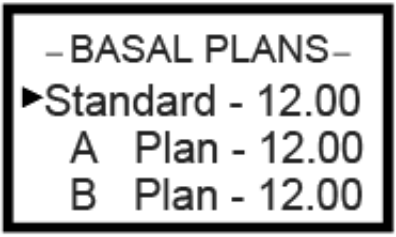

1. When BASAL PLANS screen is displayed, press ▲ or ▼ to select an item denoted by ►. Press **ACT** to activate the selected item, meanwhile enter the setting screen. Press **ACT** to confirm use the current plan.

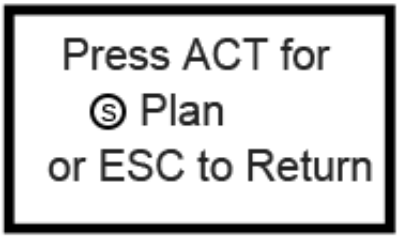

2. Set basal according to the normal operation.

Basal

❖ **Basal Review**

Site: **MAIN MENU**>**BASAL > BASAL RECORDS**

```
-BASAL RECORDS-
0312  15.5u   01
01>0.5u  02>0.5u
03>0.5u  04>0.5u
```

1. The pump saves the latest 50 records for basal rate set in **BASAL RECORDS** menu. They are helpful for changing the basal rate set and further treatment.
2. '**0312**'is the date on which the basal rate was set and activated.

   '**15.5u**'is the total amount of the basal rate delivery which is reviewed now.

   '**01**'is the last times for setting the basal rate.

   '01 〉 0.5u'means the delivery insulin amount is 0.5u for the first segment.
3. Press **ACT** to look over the basal rate settings activated on different date. Press ▲ or ▼ to look over different segments in one same basal rate setting.

Bolus

❖ **Normal Bolus**

Site: **MAIN MENU > BOLUS > NORMAL BOLUS**

Meals mode inactivated:

```
-NORMAL BOLUS-
►Units:      8.0 u
Infused      20  u
Daily MAX.   60  u
```

Meals mode activated:

```
-NORMAL BOLUS-
►Lunch:      5.0 u
 Added:      0.0 u
Daily MAX.   60  u
```

1. When **NORMAL BOLUS** screen is displayed, press ▲ or ▼ to change insulin value for this one-times delivery, press **ACT** to display a new screen. '**Press ACT to Start, or Esc to Return'**appears in this new screen, and then press **ACT** to start a normal bolus delivery.
2. In the period of normal bolus delivering, press **ESC** to stop it momentarily.

3. When Meals mode activated, and **NORMAL BOLUS** screen is displayed, press **ACT** to infuse directly. And available to press ▲ or ▼ to move ►denoting the "Added", then press **ACT** to activated the item. When the item highlighted, press ▲ or ▼ to modify the value of the item, and then press **AC** to activated the item and start the delivery.
4. Infusion time for Meals Mode
   Breakfast: 5:00~10:45
   Lunch: 10:45~16:30
   Supper: 16:30~23:00

CAUTION:

- The MAX normal bolus is 20u. In this screen, MAX DAILY is reference for your setting normal bolus, if you need to modify the MAX bolus, MAX daily and value for Meals Mode, it is necessary to get permission from your doctor and change the
  doctor's parameters.
- Infused item means the amount of delivery insulin today.

Bolus

❖ **Square Wave**

Site: **MAIN MENU > BOLUS > SQUARE WAVE**

1. **Start Square Wave**

```
 --SQUARE WAVE--
▶Units:    10.0u
 Duration:60 min
 Start SQUARE
```

When the **SQUARE WAVE** screen is displayed, press ▲ or ▼ to move ▶ denoting a item, and press **ACT** to activate the selected item and make it highlight. Press ▲ or ▼ to change the value of the selected item. When **START SQUAVE WAVE** is denoted by ▶, press **ACT** to start a square wave delivery.

CAUTION:

- The max value of square wave is limited by the MAX of bolus, and the min value is 2u.Range of DURATION for square wave is 0-240 minutes increased by 30 minutes.

2. **Stop Square Wave**

Bolus

```
--SQUARE WAVE--
►Units:   10.0u
 Duration:60 min
 Cancel SQUARE
```

When the **SQUARE WAVE** delivery is activated, you can stop it as the following steps. Firstly go to **SQUARE WAVE** screen, the third item is **STOP SQUARE WAVE** now, press ▲ or ▼ to select it by ►, and press then **ACT** to stop the square wave bolus delivery.

❖ **Meals Bolus**

Site: **MAIN MENU > BOLUS >MEALS BOLUS**

```
- MEALS SET -
►Breakfast  5.0u
 Lunch      5.0u
 Supper     5.0u
```

When MEALS SET screen is displayed, press ▲ or ▼ to select an item denoted by ►. Press **ACT**

to activate the selected item, meanwhile the item is highlighted, and press ▲ or ▼ to change the value. Press **ACT** to confirm the valve set, and press **ESC** to save and exit.

❖ **Bolus Review**

Site: **MAIN MENU**>**BOLUS >BOLUS RECORDS**

```
-BOLUS RECORDS-
0313 08:00>10.0u
0312 18:00>8.0 u
0312 12:00>8.0 u
```

The pump saves the latest 50 records for bolus delivery in **BOLUS RECORDS** menu. Press ▲ or ▼ to look over it.

Fill and Exhaust

❖ **Rewind Screw**

Site: **MAIN MENU > RESERVOIR > REWIND**

1. The process cannot be stopped, once the rewinding screw is activated. In this process, the buttons is disabled. When the rewinding is completed, the screen displays '**Rewind Screw OK, Install Reservoir**'. And now the screw is at position where the reservoir filled with 305u insulin can be hold fitly.

2. Fill the reservoir with insulin, and remove air bubbles as general methods. Remove the needle from reservoir. Cover the protecting cap.

3. Turn anticlockwise to remove the reservoir cap. Insert the reservoir into the pump with theflanges of thruster aiming the grooves of reservoir compartment. Put back the reservoir cap and tighten clockwise. Remove the protecting cap, install the pipeline, and tighten in correct direction.

   CATUTION:

   - Make sure the screw has been rewindsuccessfully, in other words, the screw is at the

bottom of the reservoir compartment, before inserting the reservoir into the pump.

- The pump provides two reservoir caps. The caps are with clockwise and anticlockwise direction connector respectively, matching with different pipelines.
- Never take out the battery from the pump immediately after the rewind screw is completed. It is necessary to take exhausting after rewinding.

❖ **Exhaust**

Site: **MAIN MENU > RESERVOIR > EXHAUST**

Make sure the reservoir and the pipeline is disconnected from your body before carry out exhausting. During of exhausting, inspect carefully insulin flowing in the pipeline and press **ESC** or **ACT** to stop exhausting.

CAUTION:

- Make sure the pipeline is disconnected from body before take exhausting.
- If the reservoir is not installed, it is not permitted to take exhausting time after time, to

avoid the piston of the pump falling off.

- The final insulin value is calculated automatically, it is not necessary to revise manually.

❖ **DAILY REVIEW**

Site: **MAIN MENU > RESERVOIR > DAILY RECORDS**

```
-DAILY RECORDS-
0313 > 45 u
0312 > 50 u
0311 > 50 u
```

The pump saves the latest 50 records for daily delivery total amount in **DAILY RECORDS** menu. They can be look over through ▲ and ▼.

❖ **EXHAUSTING REVIEW**

Site: **MAIN MENU > RESERVOIR > EXH. RECORDS**

Fill and Exhaust

```
-EXH  RECORDS-
0313 07:00> 20 u
0309 17:00> 15 u
0304 11:00> 25 u
```

The pump saves the latest 50 records for exhausting in **EXH RECORDS** menu. They can be look over through ▲ and ▼.

❖ **ALARM REVIEW**

Site: **MAIN MENU >RESERVOIR >**

ALARM RECORDS

```
-ALARM RECORDS-
0313 07:00> REW
0312 17:00> BLK
0312 11:00> REV
```

The pump saves details for latest 50 alarms, such as low battery, resume, low insulin and blocked, etc. They can be look over through ▲ and ▼.

Fill and Exhaust

REW means rewind. BLK means blocked. REV means low reservoir. BAT means low battery. DAI means exceeding the limit of the daily total amount. SYS means system error. SUS means suspend.

Suspend

Site: **MAIN MENU >SUSPEND**

When **MAIN MENU** screen is displayed, press ▲ or ▼ to select **SUSPEND**. When it is denoted by ►, pressing **ACT** will result in that the "**Press ACT to Suspend, or ESC to Return"** is displayed, and press **ACT** to suspend the pump.

Once the pump is suspended, the pump stops insulin delivery. If you need resume delivery, press firstly **ACT** and then operate as the guide showed on the screen.
The pump begins delivering insulin to your body, once the pump is powered. Generally it is not necessary to pause the delivery， with theexception of that you are in high-electromagnetic field and some especial conditions. So you need suspend the pump to avoid wasting of insulin and delivering wrong. When the surround is suitable for delivering insulin again, you can resume delivery in the same menu.

ParametersSetting

❖ **Time**

Site: **MAIN MENU > SETTINGS> DATE/TIME**

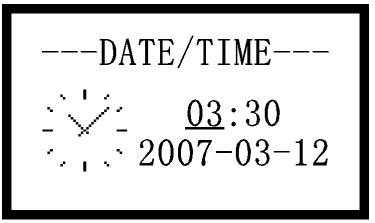

Go firstly to **DATE/TIME** screen, and then in this screen press ▲ or ▼ to increase or decrease the value of highlight item respectively, press **ACT** to select one of 5 items, hour, minute, year and month, day.

❖ **ALARM SETTING**

Site: **MAIN MENU >SETTINGS > ALARMS**

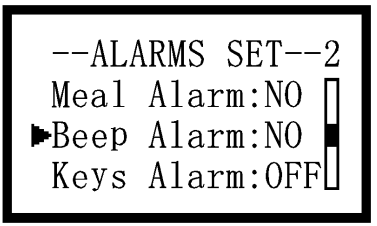

Go firstly to **ALARMS SET** screen, and then in this screen press ▲ or ▼ to select a item denoted by ▶. Press **ACT** to activate this item, and press then ▲

or ▼ to select **ON** or **OFF**, finally press **ESC** to save and exit.

❖ **RESUME FACTORY**

Site: **MAIN MENU > SETTINGS > RESUME FACTORY**

Select **Resume Factory** item in **SETTINGS MENU screen**, and press then **ACT** to go to **Passwords** screen. In this screen, press **ACT** and **ESC** to select one of 4 passwords backwards and onwards respectively, press ▲ or ▼ to modify the corresponding selected number highlighted. When the 4th item of 4 passwords is highlighted, press **ACT** to complete this entrance of passwords. When the 1st of 4 passwords is highlighted, press **ESC** to exit this entrance of passwords.

Passwords for Resume Factory: 1234

CATUTION:

- After RESUME FACTORYis completed successfully, all setting and parameters are resumed to factory default, including doctor's parameters, the infused insulin total amount today becomes zero, but all records are still saved.

Doctor's Parameters

Site: **MAIN MENU > DOCTOR PARA.**

Setting Items in details:

1. Range of Bolus: 0~85u
2. Range of Daily: 0~200u
3. Basal rate segments: 24/48
4. Meals mode: ON/OFF
5. Plus Period: 5/10/15/20 seconds
6. Breakfast: 0~85u
7. Lunch: 0~85u
8. Supper: 0~85u
9. Wave Bolus: ON/OFF
10. Meals Set: ON/OFF
11. Refer. Basal: ON/OFF
12. Temp. Basal: ON/OFF
13. Basal Plan: ON/OFF
14. Alarm Clock: ON/OFF
15. Alarms: ON/OFF

Go to **DOCTOR PARA.** screens with doctor's password, press ▲ or ▼ to select the item by ►, press **ACT** to activateit. And press ▲ or ▼ to change the status, press **ESC** to exit.

Doctor’s Parameters

Doctor’s passwords: 5678

MAX Bolus: Default 20 u; Range 0~85u.

MAX Daily: Default 60 u; Range 0~200u.

Other Information

❖ **Basic Information**

In Home Screen, press **ESC** to enter **Basic Information** screen. This screen shows you the date, the infused insulin today and details of the latest times bolus.

```
   2007/03/14
Infused: 42  u
Latest Bolus:
0314 18:00>8.0 u
```

❖ **Pump Information**

When **Basic Information** screen is displayed, press directly ▲ or ▼ to enter **Pump Information** screen. This screen shows you the pump model, S/N and the software version.

```
MODEL:PH300
S/N:200071234
VER:2.00
```

Troubleshooting

1. **Blocked and Large force**

   Solutions: a. Check the insulin

   b. Check or change the pipeline

   c. Change the battery

   d. Rotate the screw clockwise by a screwdriver

2. **Low battery**

   Solution: Change the battery

3. **Low reservoir**

   Solution: Load the insulin or suspend

4. **No display in the screen or reset automatically**

   Solution: Change the battery

5. **No delivery**

   Solution: Exceed the MAX. Refer your doctor and modify the MAX value.

6. **No work**

   Solution: Check the positive end of battery outwards.

Technical Parameters

- Size: 78*52*20 mm
- Weight: 55g
- Basal segments: 24/48 basal rates
- Infusion frequency: 2~60times/hour
- Least increment: 0.1/0.05u
- Infusion mode: basal infusion, temporary basal infusion, bolus infusion (intelligent mode/ meals mode), square wave infusion.
- Basal infusion range:

  a) General 0~2u; b) Doctor 0~5u.
- Temporary basal infusion range:

  a) For speed: 0~200%; b) For time: 0-24hours.
- Bolus infusion range:

  a) General 0~40u; b) Doctor 0~85u.
- Daily totalrange:

  a) General 60u; b) Doctor 200u.
- Filling method for insulin: auto-reset for screw droved by motor, and auto-calculate for filled insulin.

Technical Parameters

- Alarming method: Beep.
- Items of alarming: block, low energy, low reservoir, empty reservoir, large force, meal.
- Number of CPU: Dual CPU
- Volume of reservoir: 3.0ml
- Connection of infusion sets: Standard Luer lock connector
- Battery: 1.5V AAA alkaline battery
- Grade of waterproof: IPX8
- Condition for using:
  a) Temperature range: 5~40(Celsius);
  b) Relative humidity range: ≤93%;
  c) Pressure range: 86kPa～106kPa.
- Condition for preservation:
  a) Temperature range: -20℃~50℃;
  b) Relative humidity range:≤93%;
  c) Pressure range: 50kPa~106kPa.

ZHENGZHOU PHRAY TECHNOLOGY CO., LTD.

Head Office:

4/F, No.84, Jingbei 1st Road,

Economic Technology

Development Zone, Zhengzhou

450016,China

Phone: (86) 371 66783555

Fax: (86) 371 66783555

Email: info@phray.com

International Marketing Office:

5/F,Bldg 1, 2nd Sub-park of

Taohuayuan High-tech Innovation

Park,Bao'an Distict,Shenzhen

518000,China

Phone: (86) 755 27883210

Fax: (86) 755 29791155

Email: sales_intl@phray.com

Hong Kong Branch:

PHRAY INDUSTRIES (HONG KONG) LIMITED

PLATC, 23/F, LUCKY PLAZA, 315-321 LOCKHART ROAD, WAN CHAI, HONGKONG

http://www.phray.com Ver. E1405